PART NO 1100004, 5040005

VT EDGE 55/100

Fasadfäste VT

- L: 95/140 mm
- W: 40 mm
- H: 300 mm
- 1,5/1,7 kg
- Steel + Zn (hot dip galvanized)
- EN13374 – A

- 1,24 × 0,84 × 0,97 m
- 1205/945 kg
- 750/500 pcs

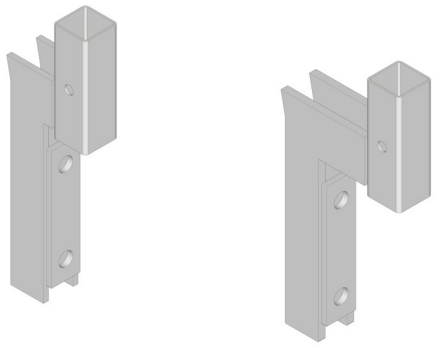

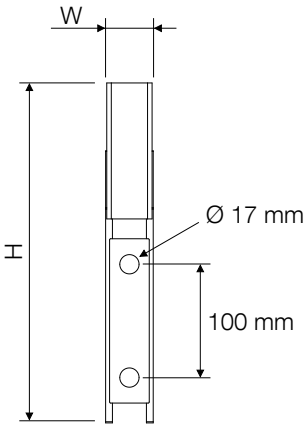

1100004

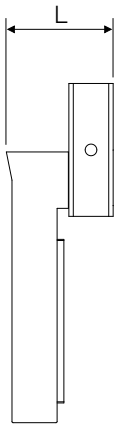

5040005

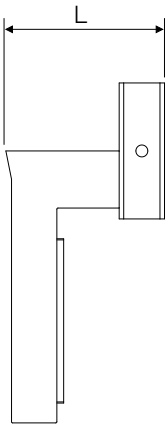

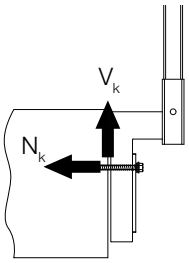

ANCHOR LOADS (Q)[1] (Per anchor, unfactored)	
N_k	5,4 kN
V_k	1,3 kN

[1]) EN 13374:2013

$Q_{ki} \times \gamma_F^* = E_d \leq R_d = R_k / \gamma_M (k_{mod}^{**})$

$^* \gamma_F = 1,5$ ** for timber

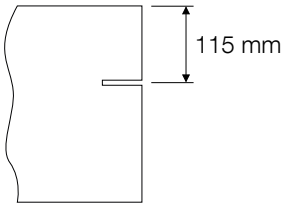

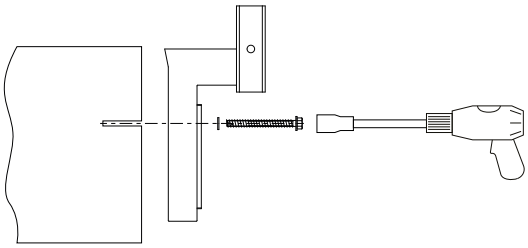

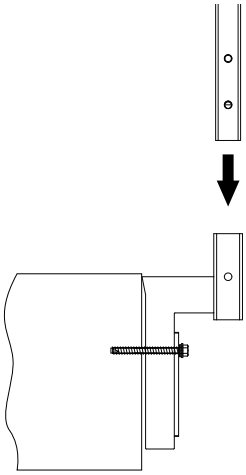

We reserve the right to make technical changes (Aug. 26 2024).